BANNERSHOP

6Ft Table(Stretch-4 sides)

TRIM LINE

Artwork must meet the trim line

SAFE AREA

All important text & graphics must be placed within the 20mm safe area

BLEED AREA

Extend artwork into the bleed area
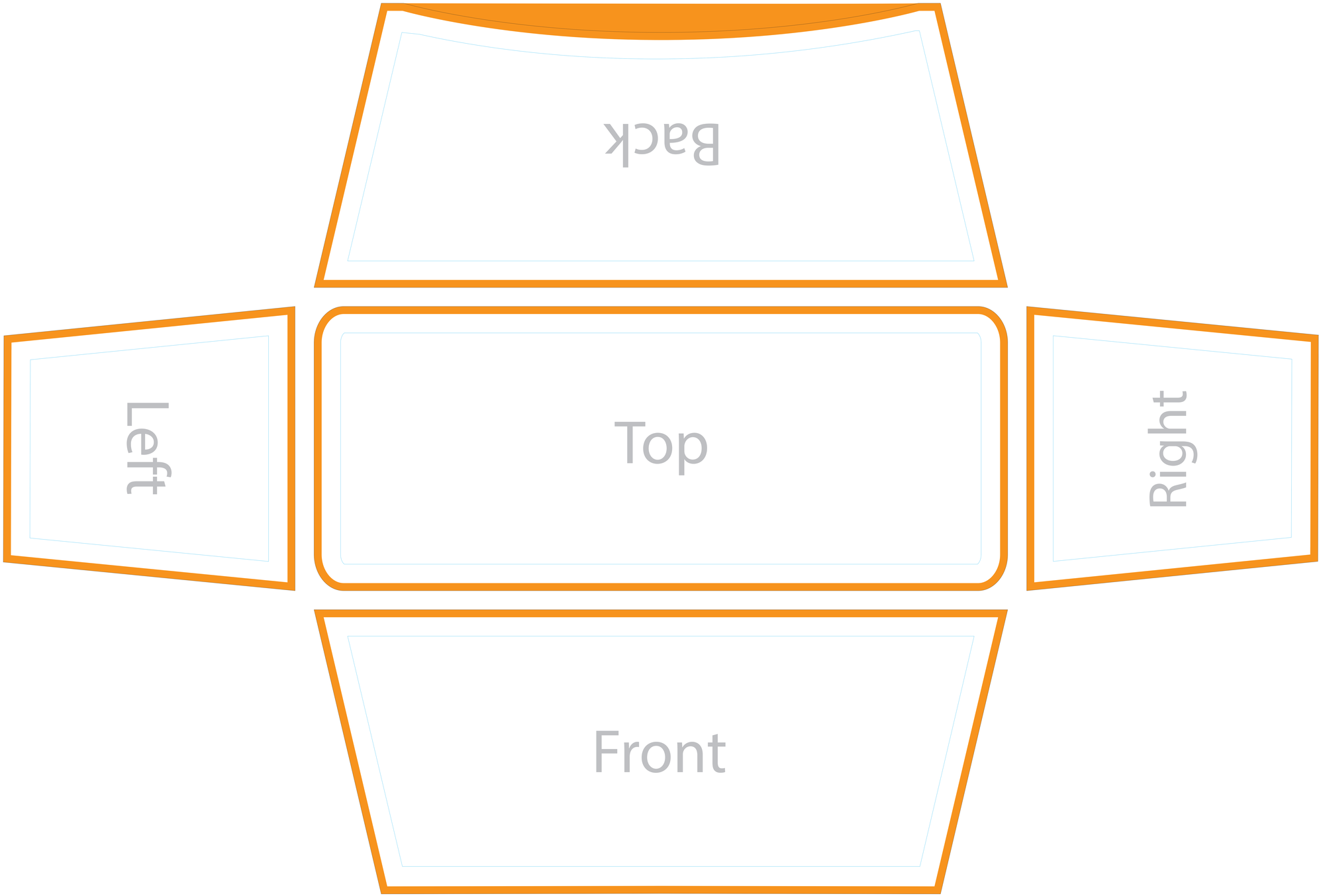
- CMYK: 150 dpi MINIMUM
- Before saving, turn off or delete guides layer
- Artwork must be setup within the template, anything outside the template will be cut off.
- DO NOT make any changes to the actual template (Do not rotate, scale, stretch or impose)